Continuous Casting Consortium

MechSE

Future Work 2011

UIUC, August 12, 2010

Stress Distribution and Crack Formation on Sliding Gate

Hyoung-Jun Lee, Seong-Mook Cho, Seon-Hyo Kim

Department of Materials Science and Engineering, Pohang University of Science and Technology, Pohang, Kyungbuk 790-784, South Korea

Brian G. Thomas

Department of Mechanical Science and Engineering, University of Illinois at Urbana-Champaign, 1206 W.Green St., Urbana, IL, USA, 61801

Sang-Woo Han, Tae-In Jung, Joo Choi

POSCO Technical Research Laboratories, POSCO, Pohang, Kyungbuk 790-785, South Korea

Patterns of Cracks Formed on Sliding Gate Refractory

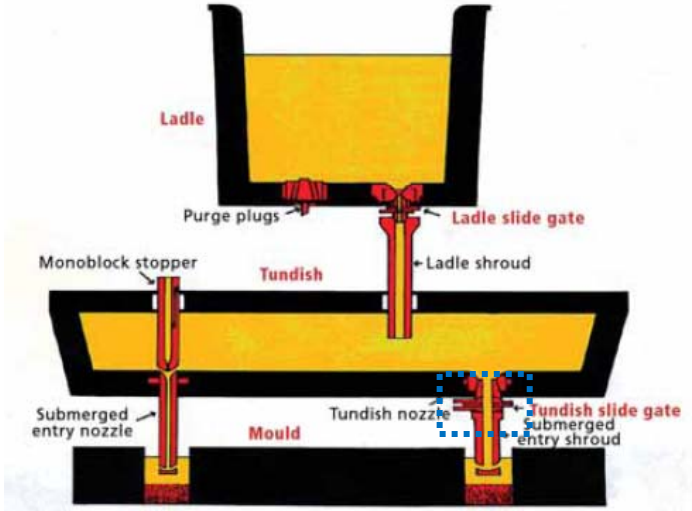

[Schematic of casting equipment]

"New Generation Ladle Slide Gate System for Performance Improvement", J. Chaudhuri, 2007

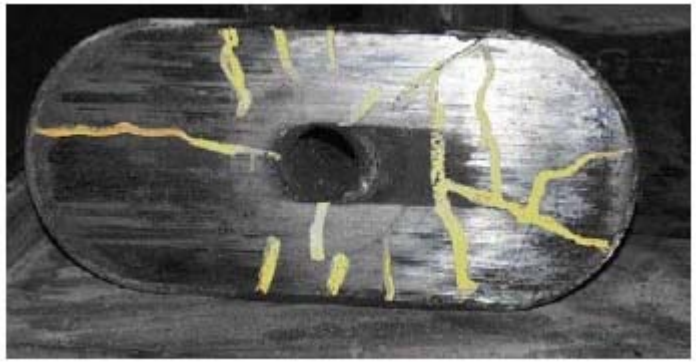

[Rectangular-rounded plate with cracks]

Service life of sliding gate plate acts as a limiting factor to achieve the expected SEN performance on continuous caster

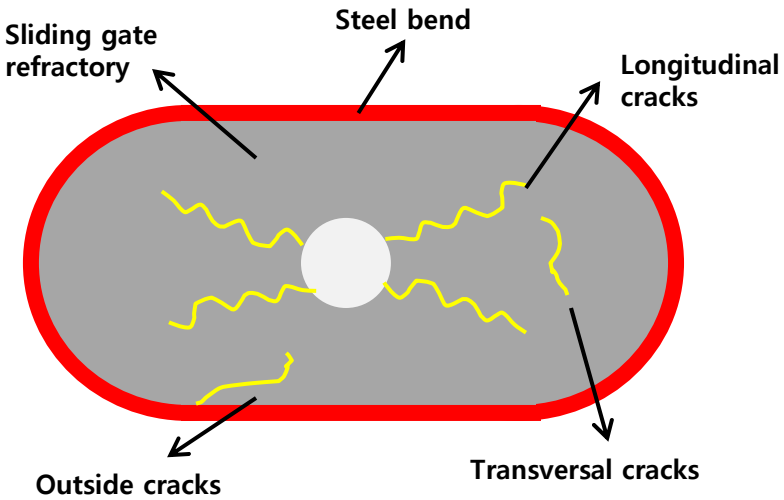

Types of crack	Caused by
Outside cracks	Thermal expansion
Longitudinal cracks	Thermal expansion
Transversal cracks	Plate support load

[Schematic of sliding gate plate]

"Steel and Refractory Chemical Interactions and Mechanical Behavior of Plates for Sliding Gate during Steel Continuous Casting", V. Munteanu, 2008

Why Cracks are Formed in Sliding Gate

- **Thermal stress** induced by temperature distribution of sliding plate with pre-heating and molten steel temperature
- **High surface pressure** from cassette supporting 3 sliding gate plates
- **Ferro-static pressure** due to height difference between tundish free surface and sliding gate location
- **Friction force** caused by mechanical movements for stabilizing the mold meniscus level

Components of Sliding Gate

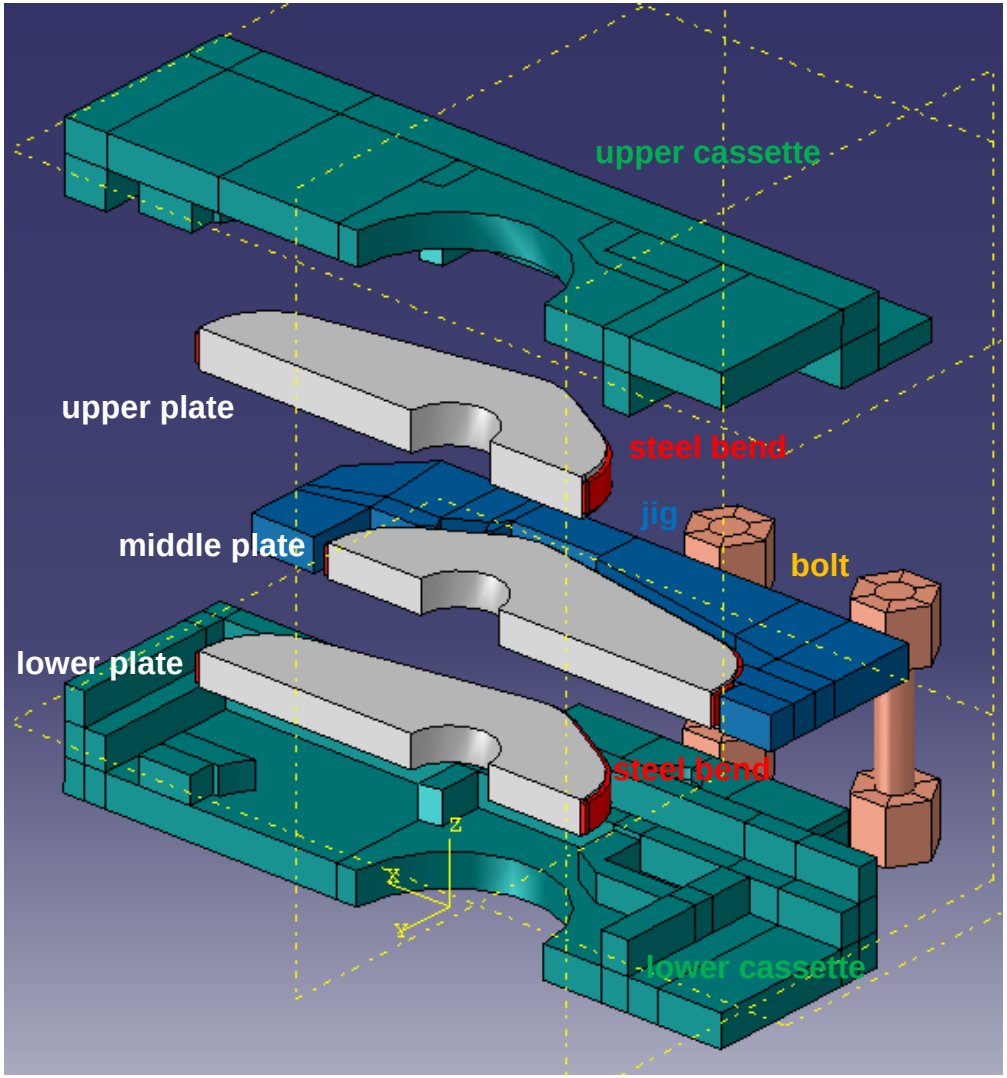

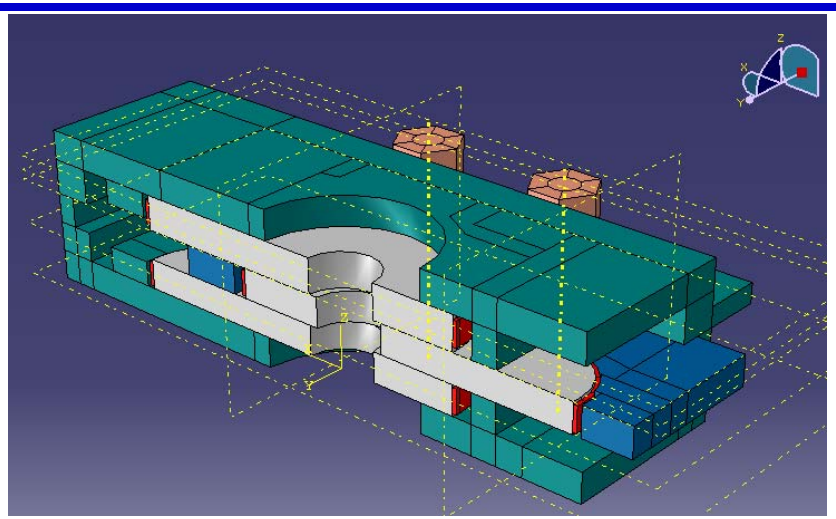

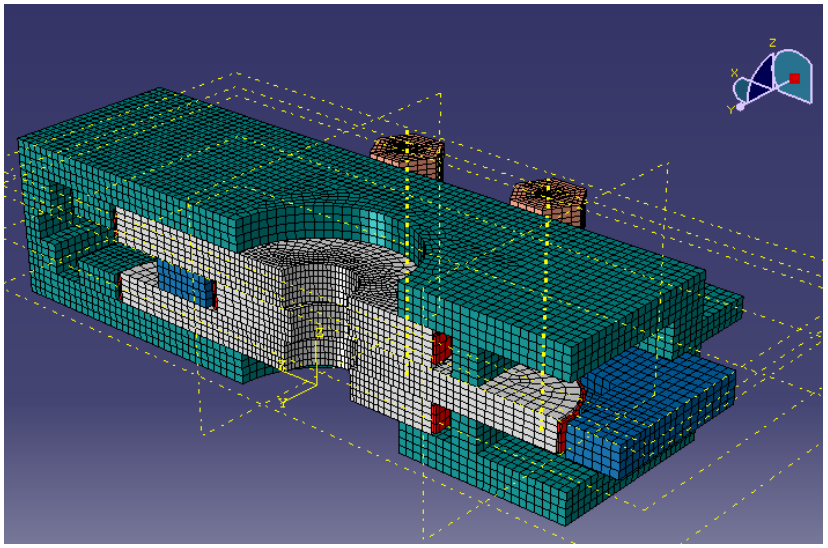

[Schematic of sliding gate parts drawing by Abaqus]

Plate Contacting Geometry with Cassette

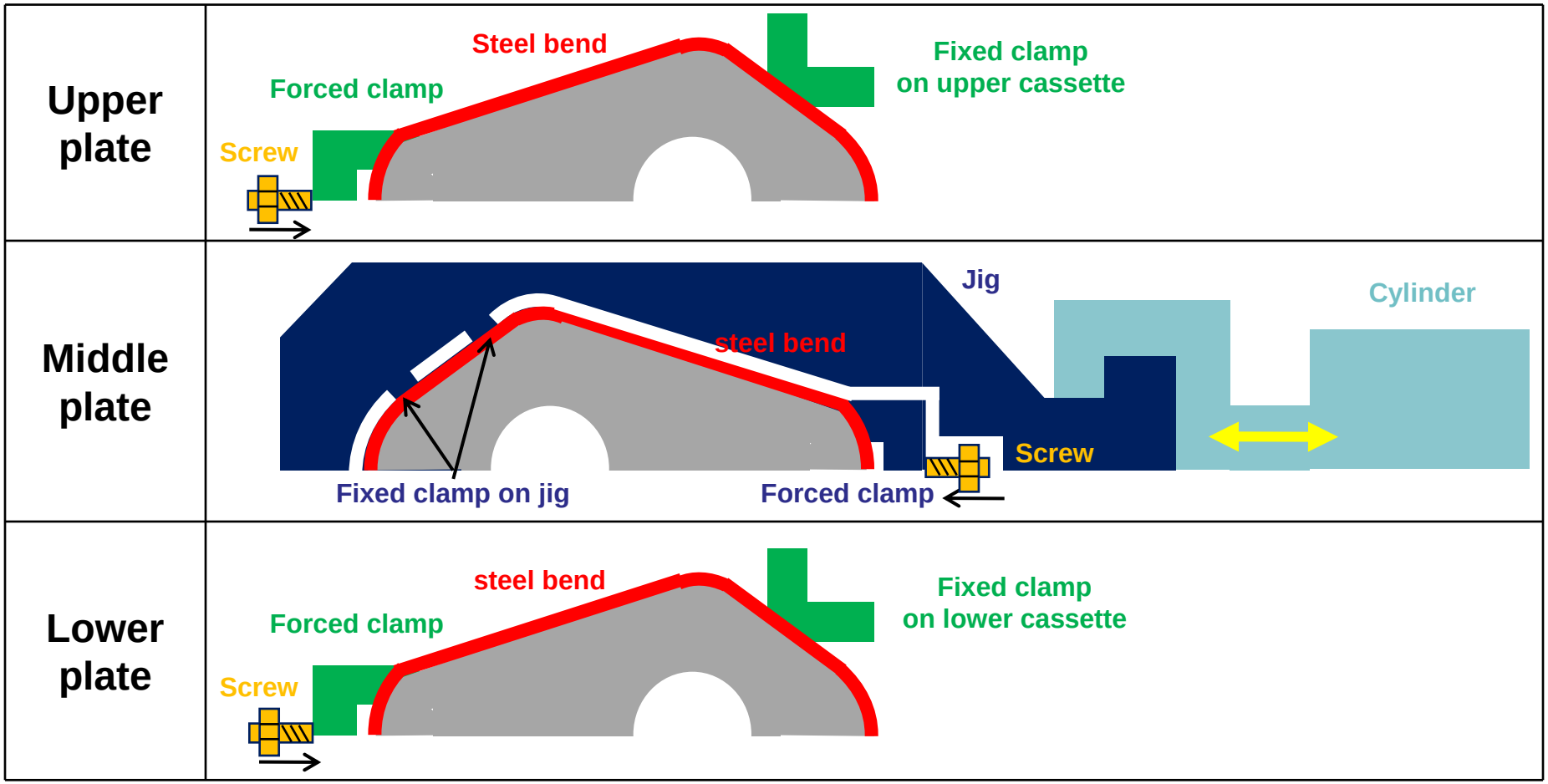

[Schematic of sliding gate plates contacting geometry (top view)]

- Cylinder is connected to middle plate via jig
- Each plate enclosed by steel bend is fixed by forced clamp

Parameters Considered for Computational Modeling

- **Temperature**

  - **Pre-heating temp. :**

  Sliding gate is heated from room temp. to pre-determined temp.

  - **Molten steel temp. :**

  Molten steel flows through sliding gate hole, during continuous casting

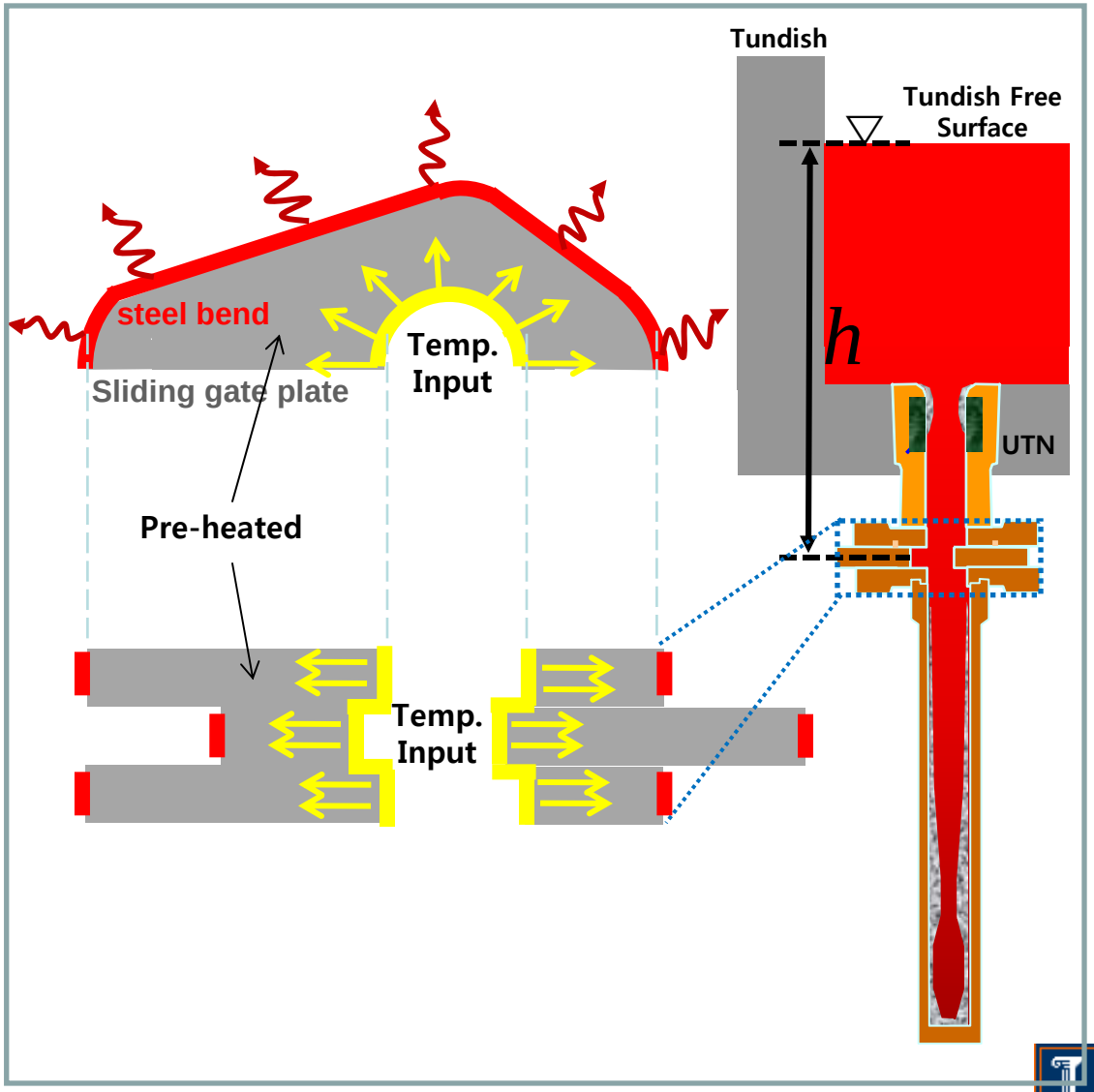

Parameters Considered for Computational Modeling

- **Load imposed on sliding plate**

Cassette is loaded by 3.5 ton weight through 4 screws bolted from bottom to top

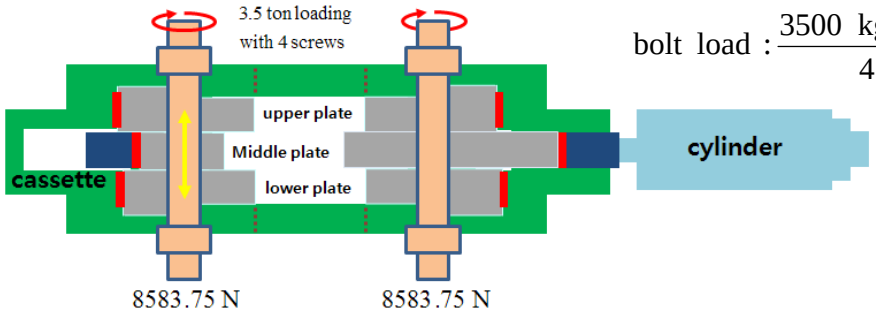

$$\text{bolt load}: \frac{3500\ \text{kg} \times 9.81\ \text{m/s}^2}{4\ \text{screws}} = 8583.75\ \text{N}$$

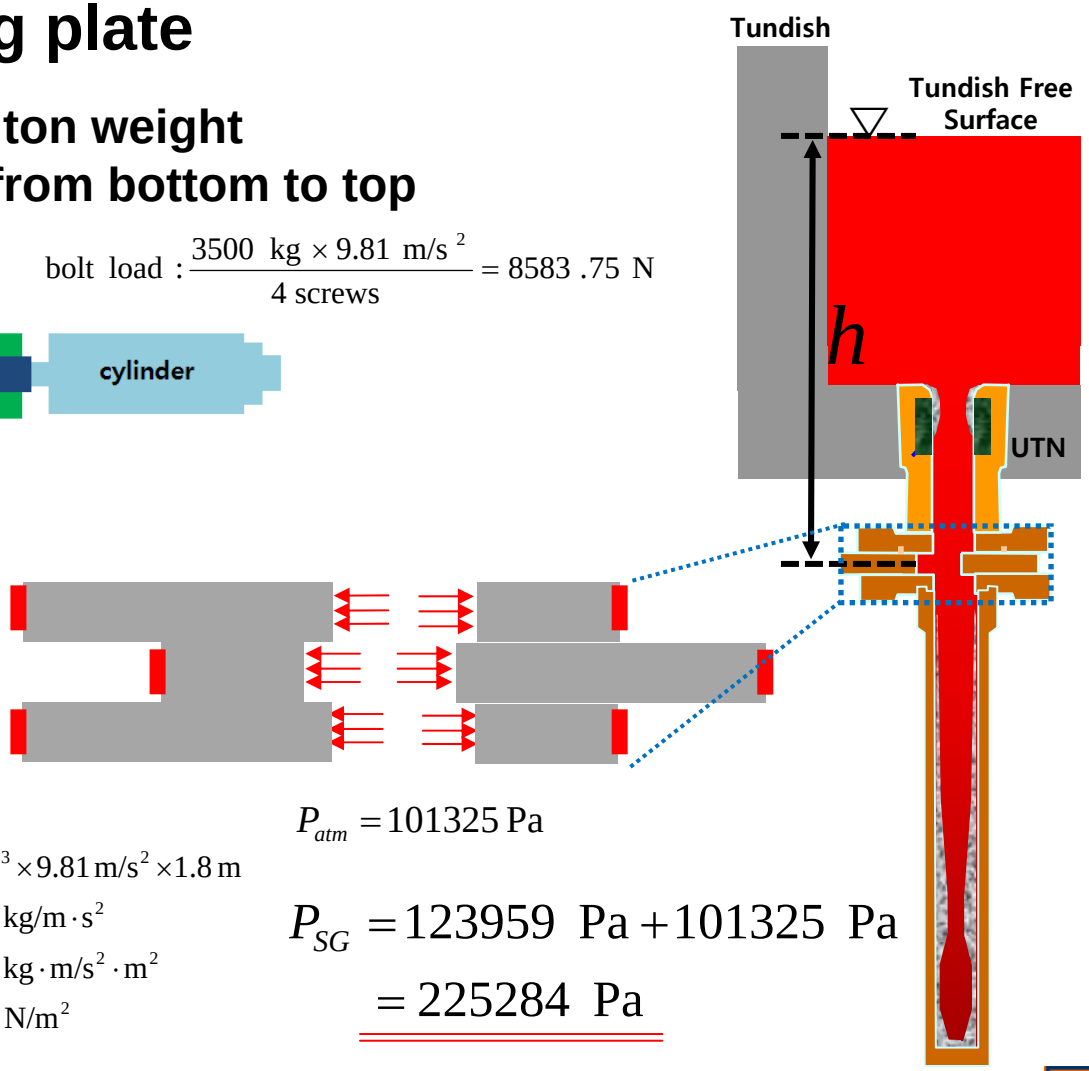

- **Ferro-static pressure**

$$P_{SG} = \gamma h + P_{atm}$$

"Ferro-static Pressure"

γ ; SpecificWeight (kN/m^3)
h ; Molten Steel Depth (m)
ρ ; Density (kg/m^3)
g ; Gravitational Acceleration (m/s^2)

$$\begin{aligned}\gamma h &= \rho g h \\ &= 7020\ \text{kg/m}^3 \times 9.81\ \text{m/s}^2 \times 1.8\ \text{m} \\ &= 123959.16\ \text{kg/m}\cdot\text{s}^2 \\ &= 123959.16\ \text{kg}\cdot\text{m/s}^2\cdot\text{m}^2 \\ &= 123959.16\ \text{N/m}^2 \\ &= 123959\ \text{Pa}\end{aligned}$$

$$P_{atm} = 101325\ \text{Pa}$$

$$\begin{aligned}P_{SG} &= 123959\ \text{Pa} + 101325\ \text{Pa} \\ &= 225284\ \text{Pa}\end{aligned}$$

Parameters Considered for Computational Modeling

- **Mechanical movement (Friction force)**

Cylinder is working back and forth to stabilize the mold meniscus level with velocity of approx. 0.025 m/s

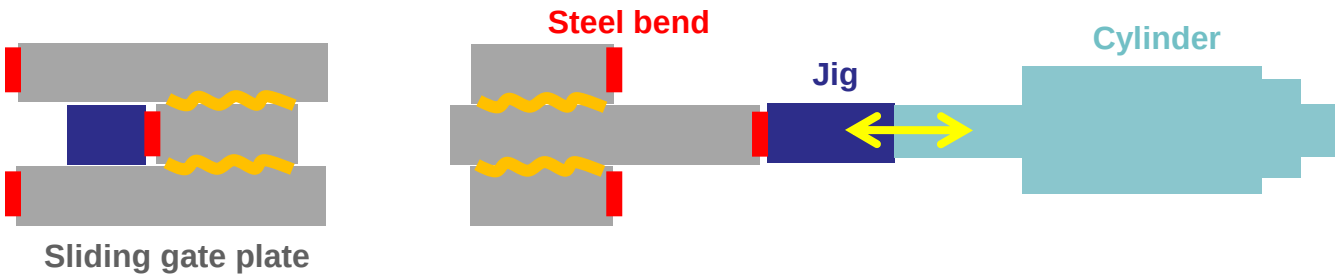

Future Plan

- **Stress distribution** will be investigated considering 5 different parameters on sliding gate plates with **different opening ratio**

- **Crack Initiation and propagation** will be investigated

- How stresses are affected on plates depending on **different pre-heating temperature** will be considered

Acknowledgements

- Continuous Casting Consortium Members (ABB, Arcelor-Mittal, Baosteel, Corus, LWB Refractories, Nucor Steel, Nippon Steel, Postech, Posco, ANSYS-Fluent)

- POSCO : Jong-Tae Ahn, Duck-hee Lee

- POSTECH : Soo-Hyun Joo